A-SAFE

Dock Buffer

PRH-1068-A-SAFE-08022024-2

Production

Dimensions (mm/inches)

- A 520 / 20½
- B 295 / 11⅝
- C 110 / 4⅓

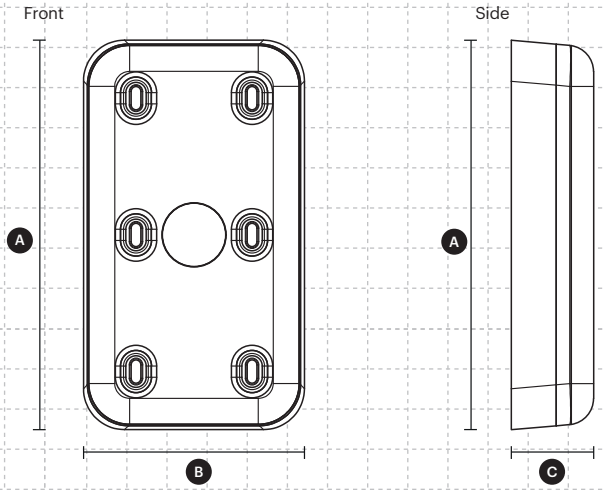

Colour Combinations

Standard Black
RAL 9005*
PANTONE Black

Standard Yellow
RAL 1007*
PANTONE 7548*

*Please note that the RAL and PANTONE colours listed are the closest match to standard A-SAFE colours, but may not be exact matches of the actual product colour and should be used for guidance only.

Product Material

A Dock Buffer weld plate is available for easy installation. Made from Mild Steel and is available to order at additional cost.

Fixings

Concrete Screw
12 x 130 hex head

Weight of product

Dock Buffer

14.50 Kg / 31.97 lbs

Dock Buffer Kit

Kit = 2 x dock buffers, inc 2 x fixings packs
30.75 Kg / 69.79 lbs

Weld Plate

12.0 Kg / 26.46 lbs

Minimum order quantities

Not applicable on this product

Suitability

Environment

Internal and External use

ATEX Suitability

Not suitable in an explosive atmosphere

Standard Base and Fixing

Concrete Screw 12 x 130 Hex Head

Washer

Vehicle Suitability

Heavy Goods Lorry	Small Lorry

Fit for purpose application

Service yard and dock protection	Building and equipment protection

Impact Zone
Dependant on the installation positioning

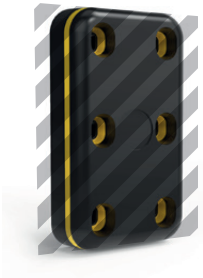

Material Properties	MONOPLEX™
Temperature Range	5°C to 40°C
Ignition Temperature	>400 °C
Flash Point	350°C to 370°C
Toxicity	Not Hazardous
Chemical Resistance	Excellent - ISO/TR 10358
Weathering Stability (Grey Scale)	5/5*
Light Stability (Blue Wool Scale)	7/8**
Static Rating (Surface Resistivity)	10^{15} - 10^{16} Ω
Hygiene Seals	No

* Weathering scale 1 is very poor and 5 is excellent ** Light stability scale 1 is very poor and 8 is excellent

Fire information

A-SAFE Step Guard is manufactured from an advanced Monoplex material. A material that offers the highest levels of flexibility and resilience without compromising on Fire safety.

Monoplex has an ignition temperature of 400º Celsius which is significantly higher than materials such as wooden pallets or polymers such as flexible PVC. This means that for combustion of an A-SAFE Step Guard to occur, a facility ire would need to be both large and well advanced, by which time any personnel would have already been evacuated to safety.

Recycling Information		
Packaging	Dock Buffer	Fixings
Mixed Recycled	7	Steel

*Fixings

Item No.	Description	Nom. Drill Hole (W)	Min. Drill Depth	Wrench Size	Torque setting	Qty per Pack	
B-02-01-0061	Concrete Screw 12 x 130 Hex Head	12mm / ½"	130mm / 5⅛"	16mm / ⅝"AF	950Nm (Impact Wrench)	6 per Buffer	1 per pack
B-02-02-0081	Washer					6 per Buffer	1 per pack

***IMPORTANT.** The fixings data detailed above are based on A-SAFE supplied fixings. If a customer uses their own fixings, they must refer to specific install instructions.

Optional Backplate

Item No.	Description	Quantity
B-03-01-0066	Dock Buffer Weld Plate -Galv	2
B-02-02-0013	M12 Form C Washer, z/p	12
900-0129	M12 Nyloc Full Nut z/p	12

Part Codes

1. N-02-01-0002
2. B-02-01-0061 - Fixings
3. B-02-02-0081 - Washer

Backplate option
This plate is ideal for attachment in metal dock door areas

4. B-03-01-0066
   Dock Buffer Weld Plate -Galv
5. B-02-02-0013
   M12 Form C Washer, z/p
6. 900-0129
   M12 Nyloc Full Nut z/p

Optional Backplate

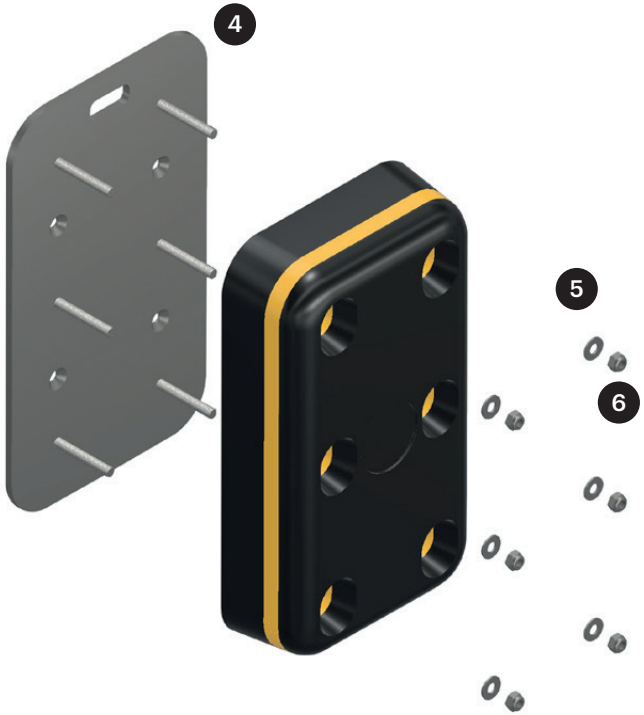

Data Sheets

CAD

Install Documents

If you have any questions please contact
the product management team at A-SAFE HQ
Product.Management@asafe.com

A-SAFE
PIONEERING WORKPLACE SAFETY

PRODUCTHUB

Document Reference	PRH-1068-A-SAFE-08022024-2
Document Description	Dock Buffer
Date Created	December 2023
Author/s	Matthew Briggs
Checked by	Jerry Budby
Approved by	Ben Allen
Revision	Version 2 - February 2024